China Care Medical Equipment Co.,Ltd
Adress:Room B101, Zhongbang Business Building, PuXing Road No. 87, Tianhe, Guangzhou,

User Manual

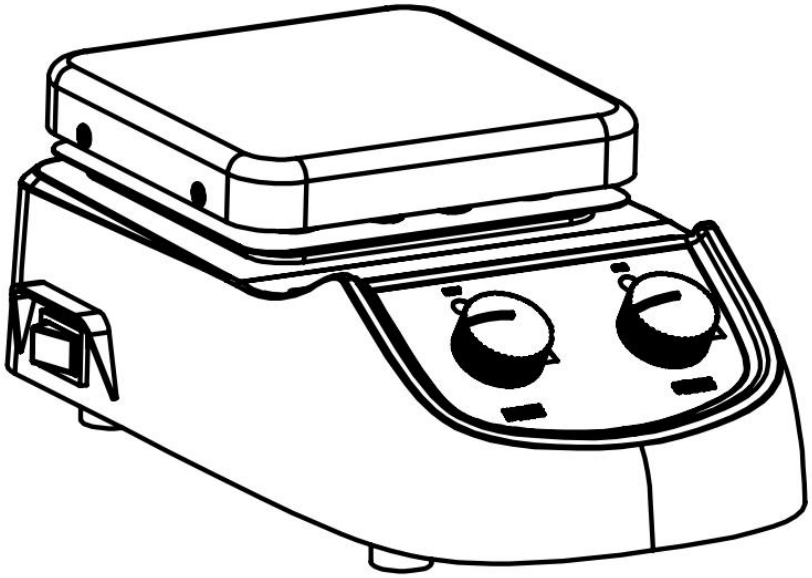

12302706

Ver.20231201

Chinaweb:www.chinacaremedical.com

Preface 1

How to Get Assistance 1

Quality Assurance 2

1. Safety Matters 2

2. Proper use 5

3. Inspection 6

3.1 Receiving Inspection 6

3.2Listing of Items 6

4. Control 7

5.Operation 8

6.Fault diagnosis 9

7.Maintenance and cleaning 10

8.Specifications 11

Preface

Welcome to the "Magnetic Stirrer User Manual." Before using this instrument, please carefully read this manual to understand relevant precautions and follow the guidance and specifications provided in the manual during operation.

How to Get Assistance

If you encounter any issues or need assistance during the installation and use process, please promptly contact the manufacturer/supplier's after-sales service department. The manufacturer's contact information is as follows:

Please have the following information ready:

- Product serial number (on the instrument nameplate)
- Warranty card
- Description of the issue
- Methods and steps you have taken to address the problem
- Your contact information, including phone number, fax, and email address

Quality Assurance

According to the manufacturer's quality assurance terms, when the instrument is used under normal conditions and operating procedures specified in this manual, the warranty period is 24 months from the date of purchase. Instruments that experience performance degradation or damage due to incorrect installation and operation, unauthorized disassembly and repair, and other violations of the specified operating terms in this manual are not eligible for repairs under this quality assurance. If you encounter issues covered by the warranty terms, please contact the manufacturer/supplier.

1. Safety Matters

	Warn! Please read this instruction manual carefully before operating the instrument and follow the safe operation rules. Only professionally trained personnel can operate this instrument.

	Caution! Hot When touching the base of the instrument and the heating disc, please note that the maximum temperature of the heating disc of the instrument is 380℃. After the instrument is turned off, the heating disc will keep warm. Please avoid burns.
	Safety grounding protection! To ensure safety, please ensure that the power socket is properly grounded before using the instrument.

- When operating wear personal safety protection to avoid the risk from:
- Splashing and evaporation of liquids
- Release of toxic or combustible gases
- Set up the instrument in a spacious area on a stable, clean, non-slip, dry and fireproof surface. Do not operate the instrument in explosive atmospheres, with hazardous substances or around water.
- Gradually increase the speed, reduce the speed if:
- Stirring bar breaks away due to high speed
- The instrument is not running smoothly, or the container is not centered on the plate
- Temperature must always be set to at least 50℃ lower than the flash point of the media used.

- Be aware of hazards due to:
- Flammable materials or media with a low boiling temperature
- Overfilling of media
- Unsafe container
- Process pathogenic materials only in closed vessels.
- If the case of the stirrer bar is PTFE, please note:
- Elemental fluorine, three fluoride and alkali metals will corrode the PTFE and Halogen alkanes make it expand at room temperature
- Molten alkali, alkaline earth metals or their solution, as well as the powder in second and third ethnic of the Periodic Table of Elements will have chemical reaction with PTFE when temperature reaches 300 ~ 400 ℃ .
- Check the instrument and accessories prior to each use. Do not use damaged components. Safe operation is only guaranteed with the accessories listed in the "Accessories" section. Accessories must be securely attached to the device and must be removed when not in use. Always disconnect the power before fitting accessories.
- When the external temperature sensor needed, the tip of the measuring sensor must be at least 5-10 mm from vessel bottom and wall.
- The instrument can only be fully disconnected from the main power supply by turning off the main or disconnecting the plug.

- The voltage stated on the label must correspond to the main power supply.
- Ensure that the main power supply cable does not touch the hotplate. Do not cover the device.
- The instrument must only be operated by experts.
- Keep away from high magnetic fields.
- Do not use this instrument in an explosive environment; This instrument has no explosion-proof function.

2. Proper use

The equipment is used in a BASIC ELECTROMAGNETIC ENVIRONMENT.

The instrument is designed for mixing and/or heating liquids in schools, laboratories or factories:

- Not more than 2000 meters above sea level
- The temperature is from 5℃ to 40℃
- Installation type: The product is designed to connect the indoor socket, the voltage fluctuation does not exceed ±10% of the normal value
- The minimum distance between the instrument and the wall is 100mm.

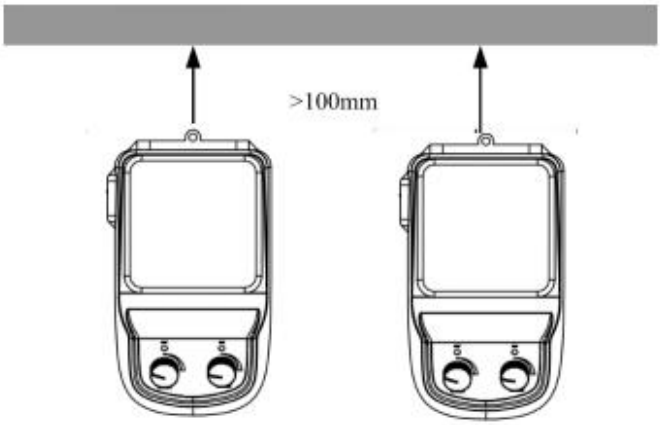

This device is not suitable for using in residential areas or other constraints mentioned in Safety Instructions.

3. Inspection

3.1 Receiving Inspection

Unpack the equipment carefully and check for any damage which may have arisen during transport. Please contact manufacturer/supplier for technical support.

⚠	**Note:** If there is any apparent damage to the system, please do not plug it into the power line.

3.2Listing of Items

Items	Qty

Master	1
Electric wire	1
Holder	1
User Manual	1
Warranty card	1

4. Control

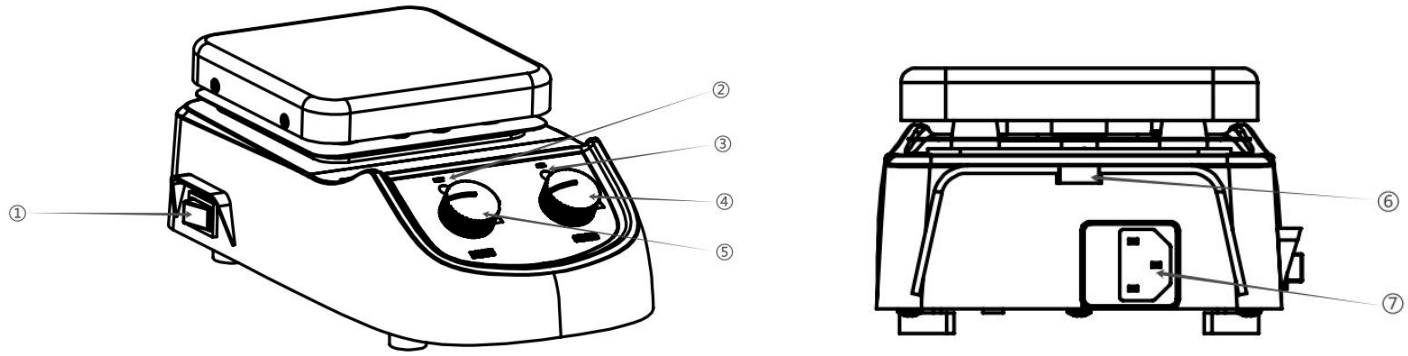

Number	Name	Explain
1	Power switch	Turn on/off the main power supply of the instrument

2	Temperature indicator light	Current heating condition
3	Stirring light	Current agitation condition
4	Mixing adjustment knob	Turn on/off the mixing function and speed adjustment function
5	Temperature adjustment knob	Enable or disable the heating function and temperature adjustment function
6	Support fixing hole	Fixed support
7	Power coupler	Power port

5.Operation

- Check whether the operating voltage specified on the nameplate matches the power grid voltage
- The power socket must be properly grounded
- Power on and perform self-check
- Place suitable mixer into container and pour into sample to be stirred
- Place the container on the dial face
- Set the mixing speed and start mixing
- Observe the working condition of the mixer
- Turn off the mixing function

If the above operation is normal, it indicates that the instrument can be officially used. If it is not working properly, the instrument may have been damaged during transportation, please contact the manufacturer/supplier after-sales service center.

⚠	**Note:** Do not remove the container during the operation of the instrument. Once the container is removed from the surface of the instrument's working disk, stop the stirring function before placing the container again Priming.

6. Fault diagnosis

Power On but Instrument Not Starting:

- Check if the power cord is securely connected.
- Inspect if the power fuse is damaged or loose

Unable to Achieve Set Speed:

This function may experience abnormal deceleration when the viscosity of the medium is too high. Confirm whether the viscosity of the liquid is within the specified working range of the device. If the viscosity is too

high, consider replacing the stirrer with a more suitable one or adjusting operational parameters.

If the fault is not rectified, contact the manufacturer/supplier.

7.Maintenance and cleaning

Correct use and maintenance of the instrument, so that it is in good working condition, can extend the service life of the instrument. During routine work, keep the instrument dry and clean, remove spills quickly, clean the outer surface with a non-abrasive cleaner, and do not connect to the power supply until all surfaces are dry.

If liquids or wet solids enter the instrument, disconnect the power supply immediately and contact the manufacturer/supplier for further advice.

Keep the instrument clean and tidy. Do not let the cleaning solution flow into the machine.

Power must be off before maintenance and cleaning, please use our recommended method to clean the instrument. Removal method:

Dyes	Isopropyl alcohol
Construction materials	Water containing tenside /Isopropyl alcohol
Cosmetics	Water containing tenside /Isopropyl

	alcohol
Foodstuffs	Water containing tenside
Fuel oil	Water containing tenside

For materials not listed in the above table, please consult the manufacturer. Before using any other cleaning method, the user must verify with the manufacturer that the method will not damage the instrument. Wear appropriate protective gloves when cleaning the instrument.

Clean the instrument before repair to avoid contamination by dangerous substances. Please put the instrument back into the original packing box and send it.

When the product is not used for a long time, please store the instrument in a dry, clean, normal temperature and stable environment.

	Warn! Remove the power cable before performing any maintenance or inspection steps.

8. Specifications

Item	Specifications
Work disk size[mm]	120x120

Plate material	Aluminium alloy disk face
Motor type	DC brush motor
Stirring position	1
Max. stirring quantity (H2O) [l]	5L
Max. magnetic bar [L×Ø, mm]	50mm
Speed range [rpm]	0-2000rpm
Temperature range [° C]	Roomtemp.+5-380
Protection class acc. to DIN 60529	IP21
Motor output power	5W
Thermal output power	200W
Power	205W
Power supply	100-120/200-240V 50/60Hz
Dimensions (mm)	235×140×90
Weight [kg]	1.4
Permitted ambient temperature&Permitted relative humidity	5-40℃, 80%RH